Points 6 Published

Details Questions

Show Question Details

Question 0.6 pts

A cross between two plants that both have yellow flowers produces 80 offspring plants, of which 38 have yellow flowers, 22 have red flowers, and 20 have white flowers. If one assumes that this variation in color is due to inheritance at a single locus, what is the mode of inheritance of flower color?

Complete dominance
Incomplete dominance
Codominance

Question 1.2 pts

Using historical records, a hematologist in the 1960s constructed the pedigree of the *Blue People of Troublesome Creek.* Many members of the Fugate family had blue skin, a rare but harmless condition known as *methemoglobemia*; other people in the pedigree had blue lips and fingertips but their skin was otherwise normal. The blue color is due to lack of function of the enzyme NADH diaphorase, which repairs hemoglobin damaged by oxidation. Unrepaired hemoglobin accumulates as blue pigment.

Based on the pedigree, describe the dominance relation between the wild-type and mutant alleles of the gene for NADH diaphorase. Note: the historical record is incomplete and some people should have had the phenotype.

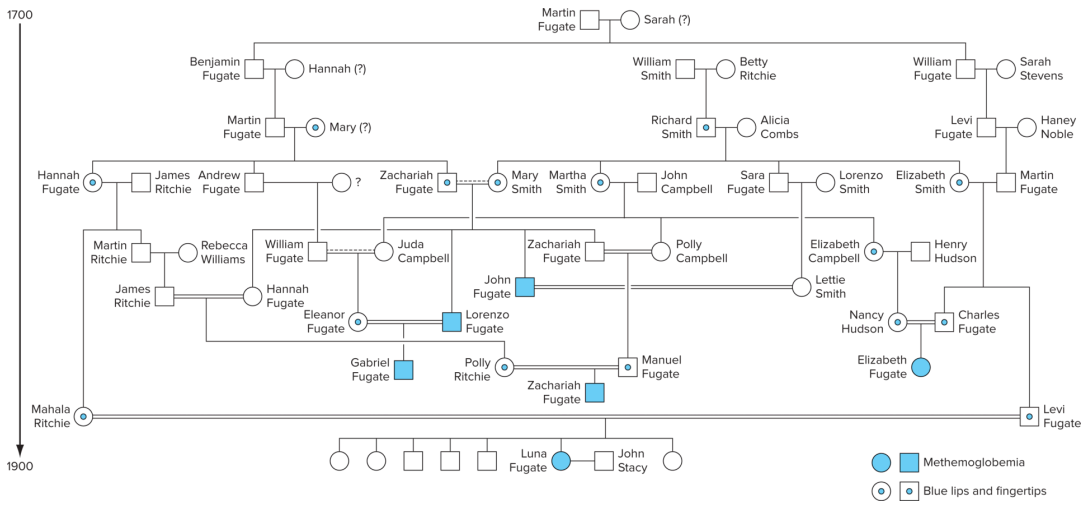

Complete dominance

Incomplete dominance

Codominance

Question

Several genes in humans in addition to the ABO gene (I) give rise to recognizable antigens on the surface of red blood cells. The MN and Rh genes are two examples. The Rh locus can contain either a positive or a negative allele, with positive being dominant to negative. M and N are codominant alleles of the MN gene. The following chart shows several mothers and their children. The males are not paired correctly, but each male fathered only one child.

	Mother	Child	Males
a.	O M Rh(pos)	B MN Rh(neg)	O M Rh(neg)
b.	B MN Rh(neg)	O N Rh(neg)	A M Rh(pos)
c.	O M Rh(pos)	A M Rh(neg)	O MN Rh(pos)
d.	AB N Rh(neg)	B MN Rh(neg)	B MN Rh(pos)

Question 0.6 pts

For mother-child pair (**a**) choose the father of the child among the males in the right column.

a

b

c

d

Question 0.6 pts

For mother-child pair **(b)** choose the father of the child among the males in the right column.

a

b

c

d

Question 0.6 pts

For mother-child pair **(c)** choose the father of the child among the males in the right column.

a
b
c
d

Question 1.2 pts

In a population of rabbits, you find three different coat color phenotypes: chinchilla (C), himalaya (H), and albino (A). These coat colors arise from multiple alleles of the same gene. To understand the dominance relationship of these alleles, you cross individual rabbits with each other and note the results in the following table.

Cross number	Parental phenotypes	Phenotypes of progeny
1	H × H	3/4 H : 1/4 A
2	H × A	1/2 H : 1/2 A
3	C × C	3/4 C : 1/4 H
4	C × H	all C
5	C × C	3/4 C : 1/4 A
6	H × A	all H
7	C × A	1/2 C : 1/2 A
8	A × A	all A
9	C × H	1/2 C : 1/2 H
10	C × H	1/2 C : 1/4 H : 1/4 A

What is the dominance series for these phenotypes?

A > C > H
A > H > C
C > A > H
C > H > A
H > A > C
H > C > A

Question 0.6 pts

What are the possible genotypes for the himalayan rabbit in cross number 4?

AA
AC

AH
CC
CH
HH

Question 0.6 pts

Huntington disease is a rare dominant condition in humans that results in a slow but inexorable deterioration of the nervous system. The disease shows what might be called age-dependent penetrance, which is to say that the probability that a person with the Huntington genotype will express the phenotype varies with age. Assume that 50% of those inheriting the *HD* allele will express the symptoms by age 40. Susan is a 35-year-old woman whose father has Huntington disease. She currently shows no symptoms. What is the probability that Susan will show symptoms in five years? Give your answer as a percentage (e.g. 10%, 20%, etc.).

25%

+ New Question + New Question Group Find Questions

Notify users this quiz has changed

Cancel Save